25 287 GL0 **ESSENCE CONCEALED SHOWER SYSTEM WITH RAINSHOWER MONO 310**

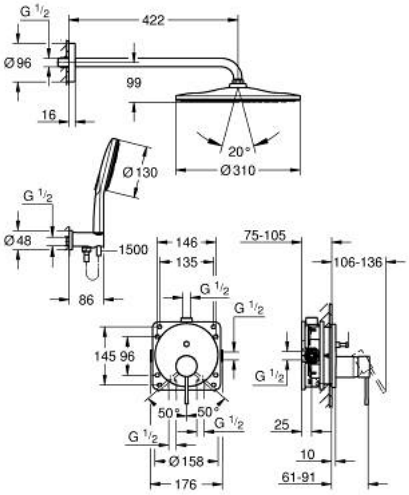

DESCRIEREA PRODUSULUI

- Colour: cool sunrise
- compus din:
- concealed single-lever mixer with 2-way diverter (24 167)
- GROHE Rapido SmartBox universal rough-in box, 1/2" (35 604)
- Rainshower Mono 310 head shower set including horizontal shower arm 422 mm
- Rainshower SmartActive 130 hand shower 3 sprays
- shower outlet elbow 1/2" with holder (26 658)
- furtun de duş Silverflex 1.500 mm
- optional flow regulator 9.5 l/min included for hand shower