34 863 GN0 **GROHTHERM SMARTCONTROL CONCEALED SHOWER SYSTEM WITH RAINSHOWER SMARTACTIVE 310**

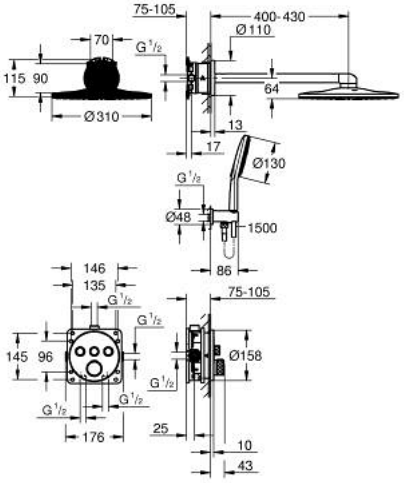

DESCRIEREA PRODUSULUI

- Colour: brushed cool sunrise
- compus din:
- unitate încastrată cu termostat 3 valve (29 121)
- GROHE Rapido SmartBox universal rough-in box, 1/2" (35 604)
- Rainshower SmartActive 310 head shower set 2 sprays (26 475) including horizontal shower arm 430 mm and head shower rough-in (26 483)
- Rainshower SmartActive 130 hand shower 3 sprays
- shower outlet elbow 1/2" with holder (26 658)
- furtun de duş Silverflex 1.500 mm
- optional flow regulator 9.5 l/min included for hand shower